CITY OF FRAMINGHAM
DEPARTMENT OF PUBLIC WORKS

DUAL GRATE CATCH BASIN

DATE: MARCH 2017
REV: 4

DETAIL NO. D-4.1.2

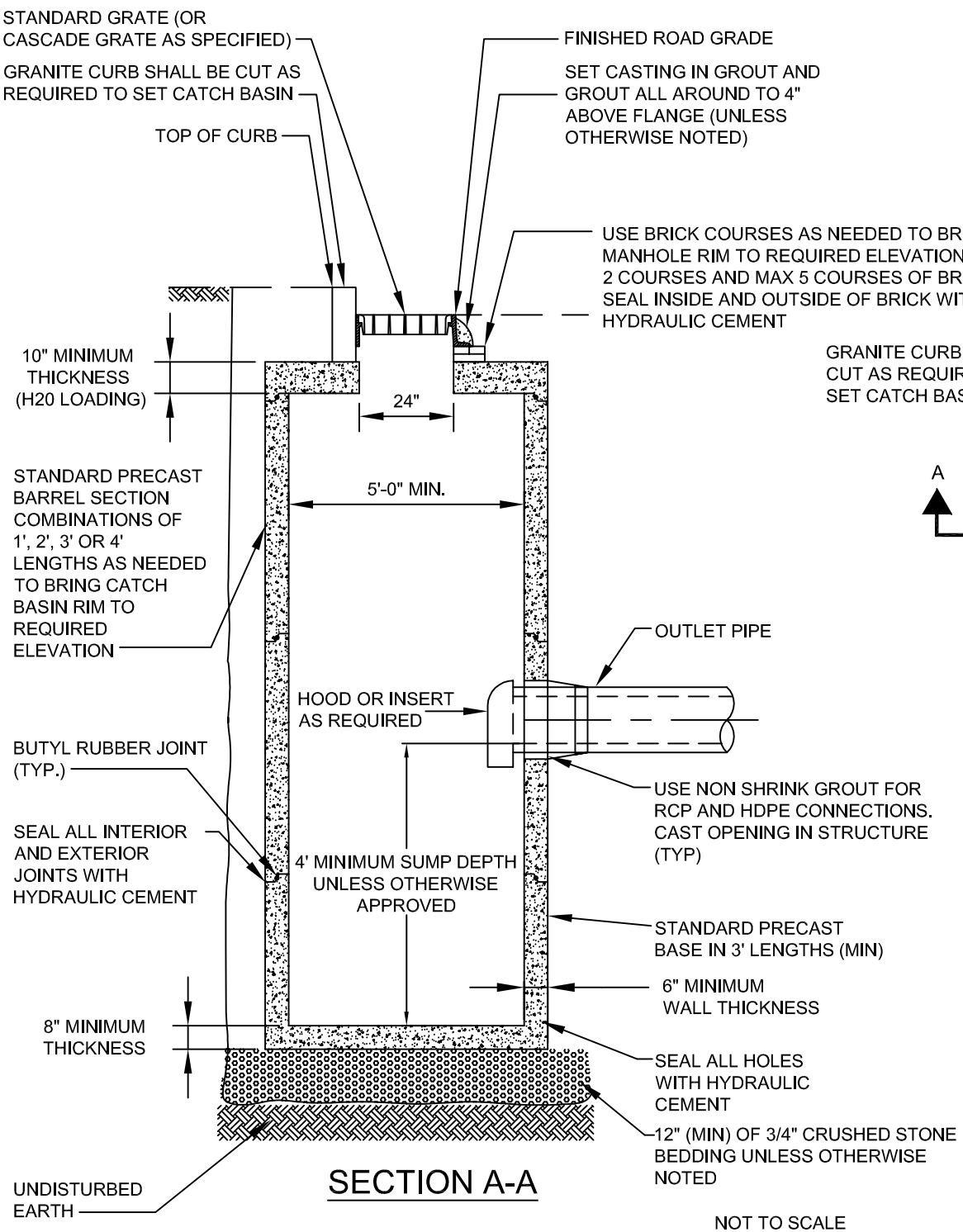

SECTION A-A

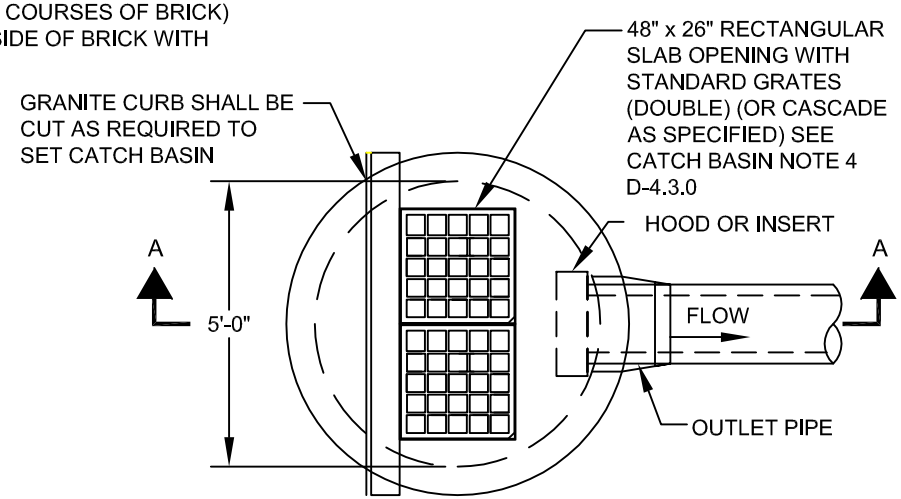

PLAN

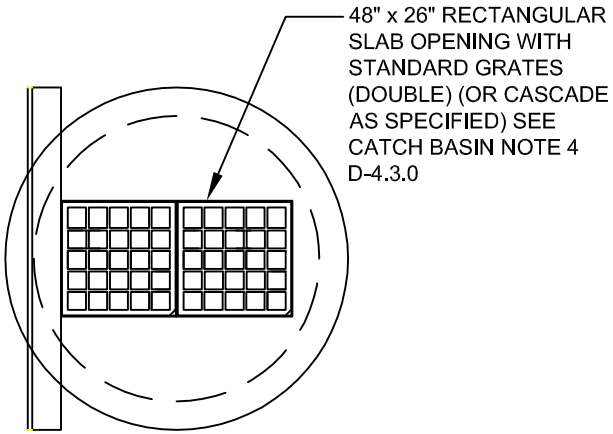

OPTIONAL PLAN

NOT TO SCALE