CITY OF FRAMINGHAM
DEPARTMENT OF PUBLIC WORKS

SINGLE GRATE CATCH BASIN

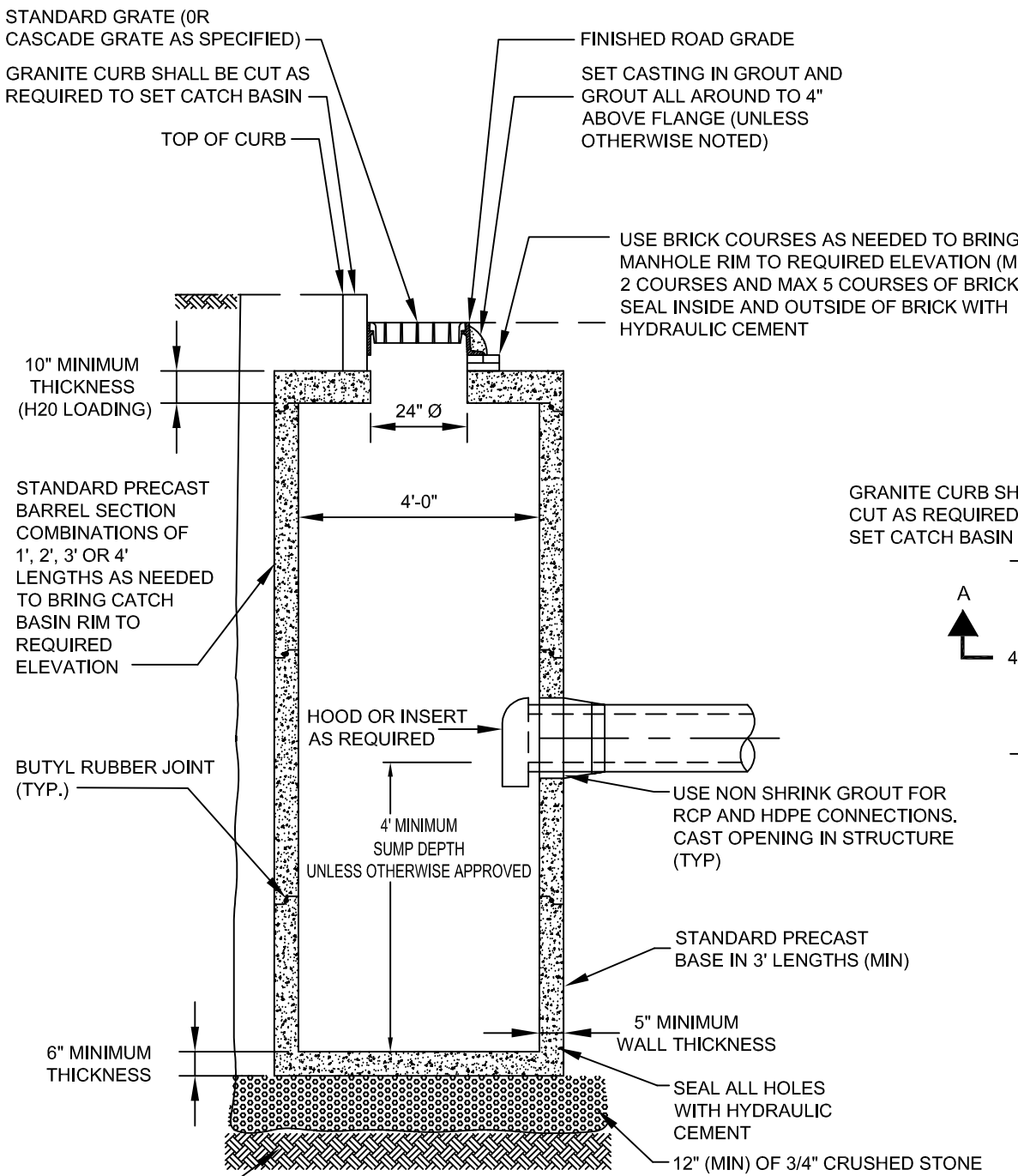

SECTION A-A

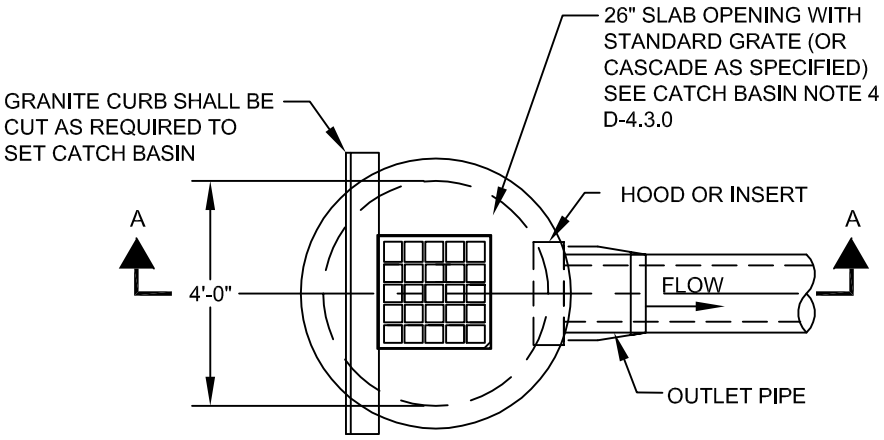

PLAN

NOT TO SCALE

DATE: MARCH 2017
REV: 4

DETAIL NO. D-4.1.0